Tree Swallow and Eastern Bluebird

Eastern bluebirds nest throughout North Dakota. The best habitat consists of areas comprised of short grasses with nearby fence posts, high line wires, or sparse trees where birds can perch. Bluebirds normally will not nest within city limits or farmsteads where competition from house sparrows is intense. For best results, nest boxes should be placed in pairs about 10-25 feet apart and 100-200 yards between pairs. They should be put 4-6 feet above the ground on steel posts or wood posts with predator guards. The entrance hole should face in a general northeast direction to prevent sun from shining in and over-heating the box.

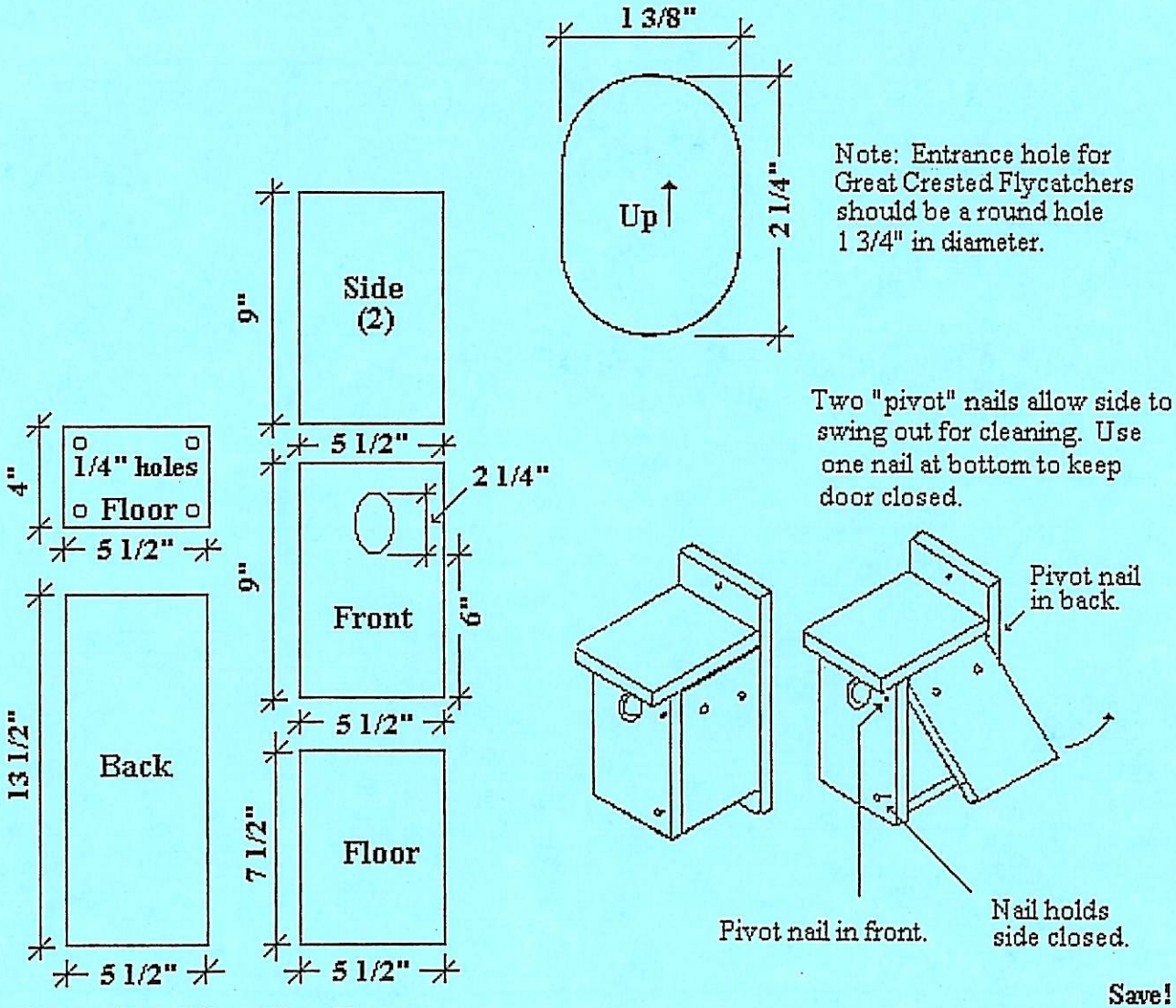
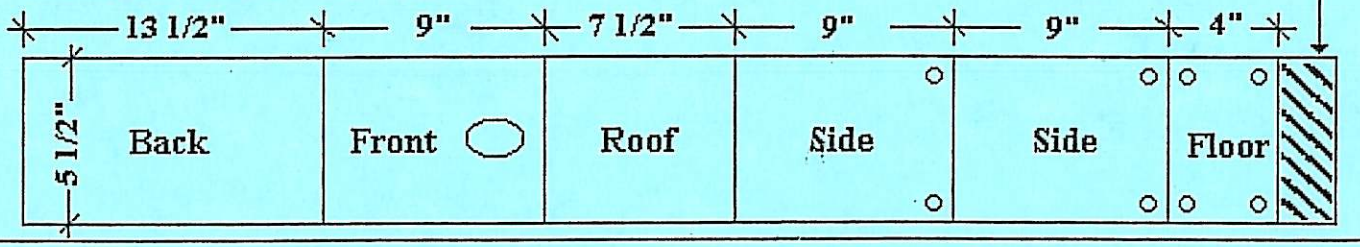
Lumber: One 1" x 6" x 6'