American Robin and Barn Swallow

The American robin is one of the most commonly known urban birds and is a joy to welcome back in the spring. A shelf as described below can be placed on the wall near a window where the birds can be observed throughout the nesting season or to a tree trunk or post 6-10 feet above the ground. Barn swallows will also utilize this shelf structure and may be encouraged to nest away from a doorway or other inconvenient location if presented with this opportunity.

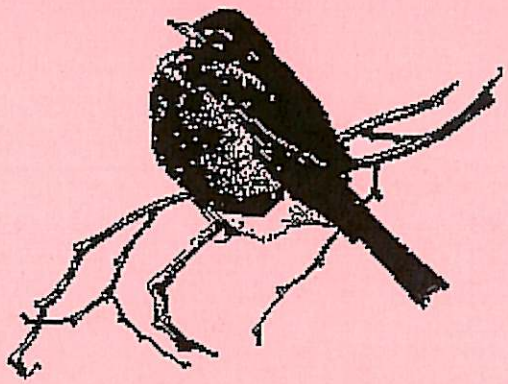

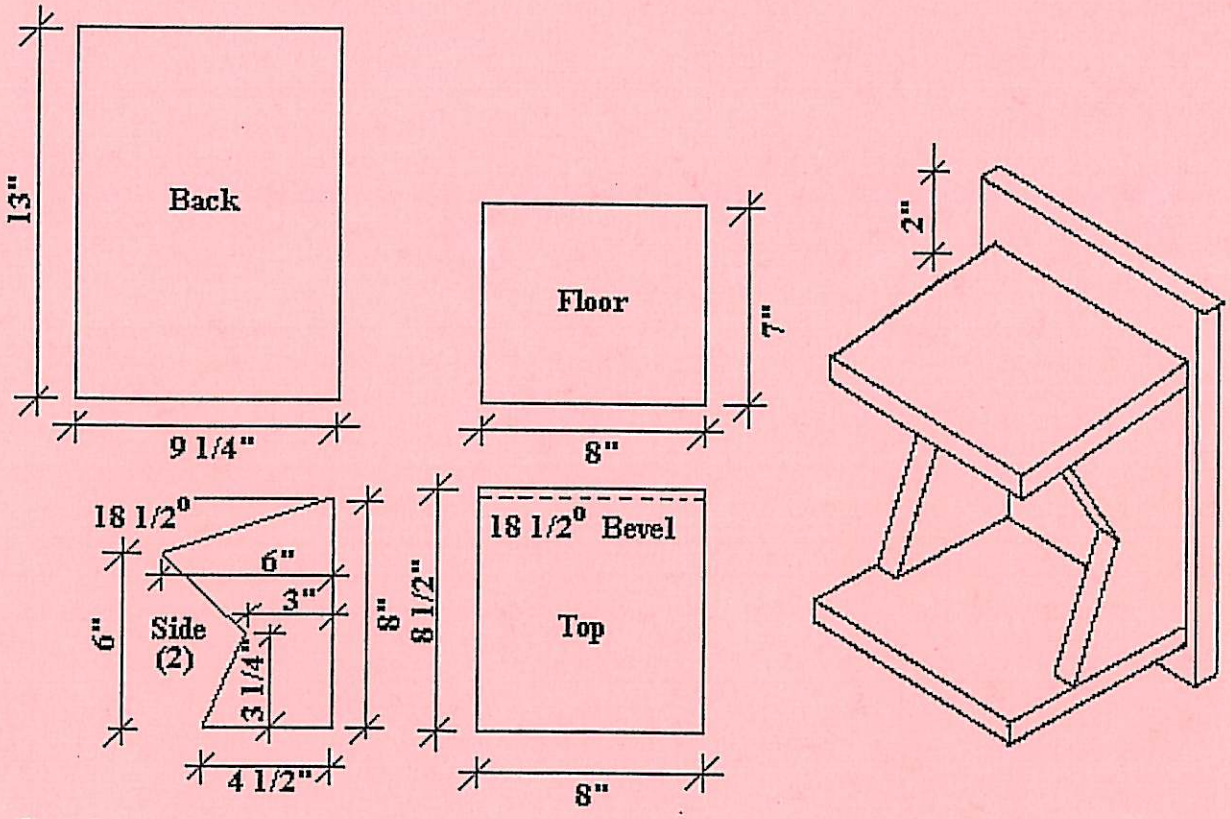
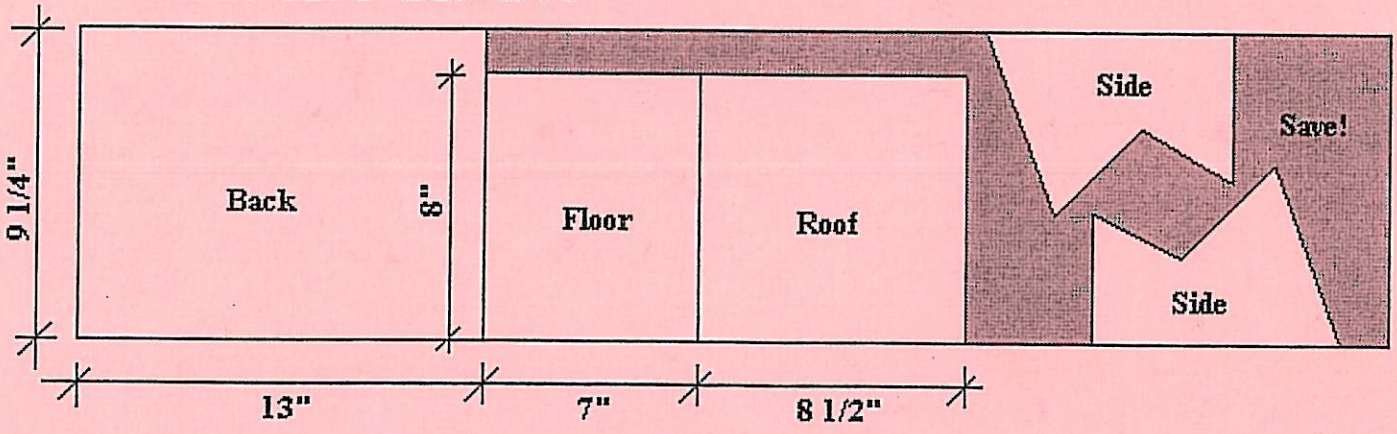
Lumber: One 1" x 10" x 4'0"